TIPS & TRICKS

ASA FARM SOLAR ID200

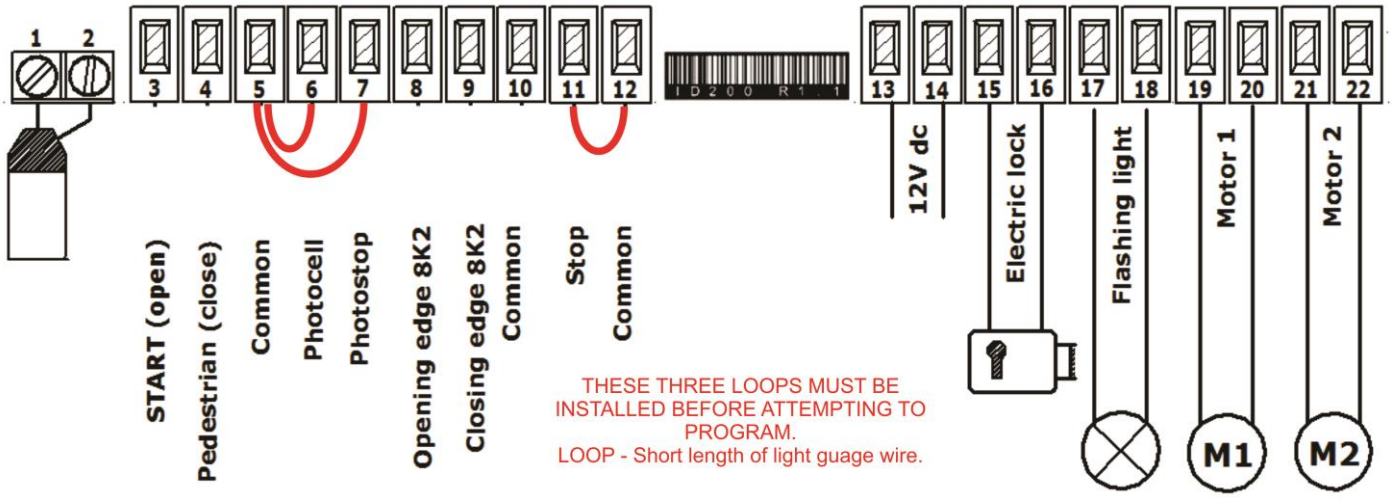

- **TIP** – Always install the motor/s and program using safety loops as described below before installing accessories. Accessories should be installed one by one following successfully installing and programming the motors.
- **TIP** – You need to fit three small loops of wire to your safety inputs to make anything work. These need to be removed later if you install safety devices to these input terminals. But for now take three pieces of light gauge wire (speaker or telephone wire is good) about 40mm long and strip both ends 7mm and insert them as above from 5 to 6, 5 to 7 and 11 to 12.
- **TIP** - Ensure JP1 on the control board is set to the correct voltage for your system.
- **TIP** – If using the transformer to program. The transformer has two voltages. Use red and black for 12 volts or red and green for 24 volts. These connect to FS3 and FS4.
- **TIP** – If using one motor only (single gate) use the terminals for Motor 2.
- **TIP** – The manual offers both automatic programming and manual programming. Manual programming gives more control and is preferred by professional installers.

STOP!

Solar connections are on the next two pages. Be sure to read, understand and follow to avoid damage and disappointment.

Solar Panel Connection ID200

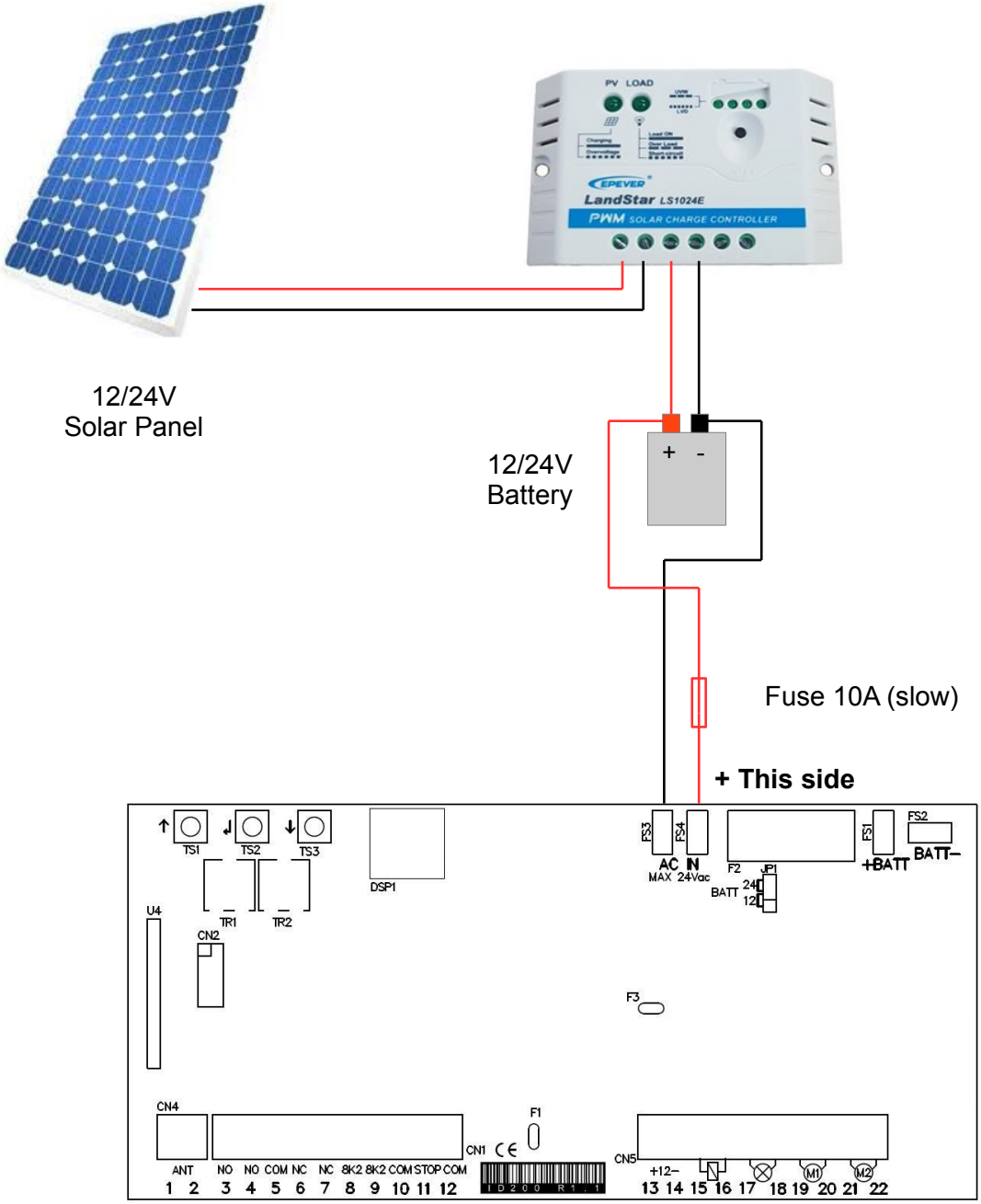

GENERAL SOLAR NOTES

SOLAR PANEL SIZE
Generally speaking simple automatic gate installations will work perfectly in Australia using a 10 watt solar panel. The solar panel size determines the amount of energy you can collect each day. In a simple gate installation we need to collect enough energy to power our control board and run the gate and a 10 watt panel will do this. If however the installation is to include keypads, safety beams or other power hungry devices it may be necessary to increase the solar panel size. Another example where you may wish to consider upsizing your solar panel is where you may have a partially shaded area and you need to collect your energy each day in a shorter period of time. If you do decide to increase the size of your solar panel it may be necessary to install a simple regulator to protect your battery. Check with Automatic Solutions regarding this.

SOLAR PANEL DIRECTION
Your solar panel ideally should be mounted at an angle of 35 degrees and facing north (NB: In Australia).

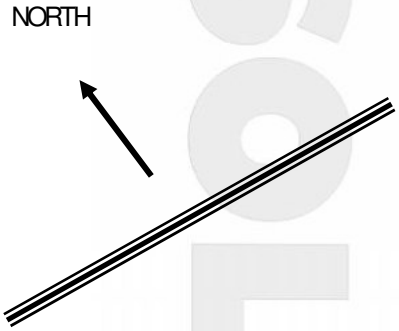

BATTERY SIZE
The battery stores the energy that you collect each day and your system draws on this battery to operate. All batteries have a limit to their storage capacity and can therefore only store enough energy to last our system a certain period of time. What happens if we have for example three days with little or no sunlight, very dark and overcast days? Our battery capacity reduces. The size of the battery will determine the number of days we can have as backup or how many days our system can survive without charging. In general terms bigger is better.

CABLES
Cables must be low voltage cables (5mm is good). Length of cables must be kept to a minimum. Ideally the solar panel will be no more than 10 metres from the battery and the battery will be no more than 5 metres from the motor. Connections must be clean and good quality.

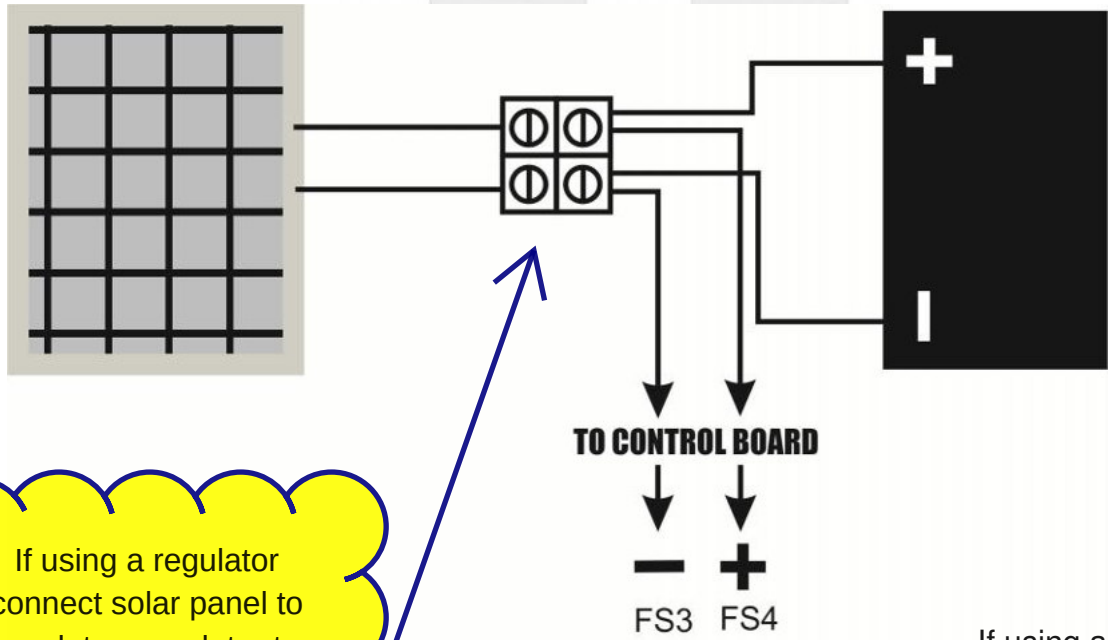

If using a regulator connect solar panel to regulator, regulator to battery and then battery to control board. Do not take the board to the regulator.

If using a regulator go solar panel to regulator, regulator to battery and then battery to control board. Do not take the board to the regulator.

AUTOMATIC SOLUTIONS
Australia Pty Ltd

FARMSOLAR

GENERAL

E3300
Motor Voltage – 12 volt
Power Absorbed – 70 watts
Speed – 0,019 metres per second
Maximum Thrust – 1500 N
Protection Level – IP43
Duty Cycle – 90%
Dimensions – 670L x 90W x 185H
Stroke – 30 CM
Maximum Leaf –5 metre farm gates
Maximum Leaf Weight – 250 Kg
Opening Time – 16 Seconds

ID200
Motor Voltage - 12 / 24 DC
Motor Inputs - Two
Battery Charger – Inbuilt 12/24V
Receiver – Inbuilt or External
Limit Switches – No
Pedestrian Input – Yes (NO)
Start Input - Yes (NO)
Stop Input – Yes (NC)
Photocell Input – Two (NC)
Electric Lock – Yes 12Vdc 1A
Slow Speed Regulator – Yes

IMPORTANT—READ THIS FIRST

Parts of these instructions are intended as a quick start guide and should be used in conjunction with the full instructions. The quick start instructions provide the basics to get you up and running and are based on the most commonly used installations in Australia.

SAFETY

This booklet will offer you information you may need to install your gear motor and to safeguard your safety.
However, caution is unquestionably indispensable and nothing is better than preventing accidents.

WARNING: any repair or adjustment of working machinery is strictly prohibited unless all the necessary precautions (electrical supply disconnected and motor off) have been taken in order to avoid possible accidents.
WARNING: any repair must be carried out by qualified people.
WARNING: All moving mechanisms must be provided with suitable protections.
WARNING: Keep the automatic controls out of the reach of children.
WARNING: Command pulses must be given from positions where the gate is visible.
WARNING: Use transmitters only if you can see the gate.

Read carefully the instructions enclosed in this manual.
Keep this booklet in a suitable place well known to all interested people.

PRELIMINARY CHECKS

In order to make the automation work efficiently; the gate to automate must have the following characteristics:
- It must be balanced.
- It must oscillate fluently.
- You must be able to carry out manual closing and opening of the gate without any effort.
- Make sure that the gate has a solid structure and that there is no friction points in its movement.
- Make sure that the gate/s have both solid opening stops and solid closing stops.

GENERAL ORDER OF INSTALLATION

To ensure a good installation of the gear motors E3300, we suggest the following order of installation:
1 - Open the box and take out gear motor. Inspect the contents and ensure all components are present.
2 - Make sure that the leaf of the gate is perfectly horizontal.
3 - Determine the height position of your motor and mark post bracket position.
4 - Spend some time here considering the correct height and geometry of your post bracket.
5 - Attach the gear motor on to the support post.
6 - With gate/s leaf closed, turn and slide the screw of gear motor's shaft, until it comes to the end of the screw.
7 - Screw shaft back 1 complete turn of 360º.
8 - Place the gate support plate in the hole of the shaft end and position it against the gate leaf.
9 - Fix it to the gate leaf taking in account the inclination.
10 - Put the gear motor into manual operation mode with your override key and test your install for smoothness.
11 – If correct proceed in the same way with the other gate leaf.
12 - Place the mechanical limit stops
13 - Connect the gear motors to the logic controller.
14 – Program and test your installation
15 – Attach your safety devices and access devices one by one testing for correct operation at each point.

MAINTENANCE

Periodically check your installation for loose or worn fastenings, correct alignment and operation of your gate/s and correct operation of your manual override operation. Clean and keep clean all areas of the installation. Remember that the motorisation has been planned in order to help you use the gate. This means that it does not resolve the problems caused by an inadequate installation or by a poor upkeep of the gate.

E3300 GEAR MOTOR INSTALLATION

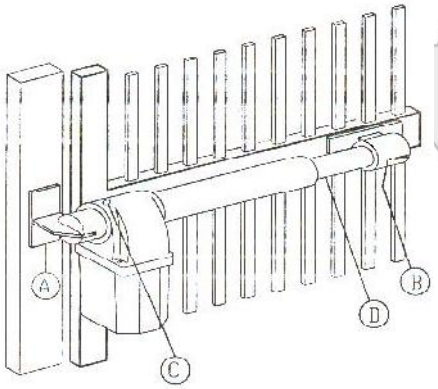

INSTALL POST BRACKET
The position of the post bracket "A" is critical to the success of your installation and attention needs to be paid to both its correct height and also its position on the post in respect to the relationship between your gate hinge pivot point and the motor pivot point on the bracket.

Once you have determined the general desired height of your motor, position the bracket and take note of dimensions "J" and "K". In a standard installation the basic aim is to get dimensions "J" and "K" to be as close as possible to equal.

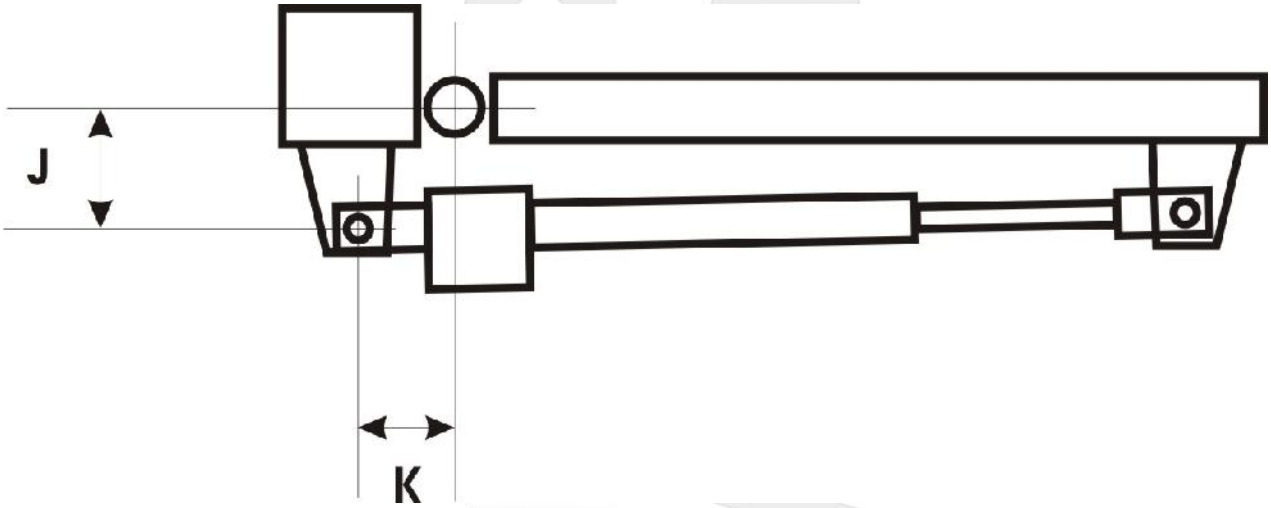

INSTALL GATE BRACKET
With your post bracket securely fastened, attach your gear motor to the post bracket with the bolts provided. Take care to support the weight of the gear motor at this point and throughout this stage. Wind out shaft "D" all the way till the end. Now turn shaft "D" back one complete turn of 360 degrees. Attach your gate bracket to the shaft end "H" and position on the gate. Fix your gate bracket at this position. Using your battery and the ends of the motor leads simply attach one lead to the battery negative and the other to the battery positive to move your gate and gear motor through the entire 90 degree arc to test the smoothness of your installation. If your gate tries to close instead of open simply reverse the leads on the battery. If your gate and gear motor moves smoothly through the entire travel range then you are ready to proceed to the next point. If you are having difficulty or hitting sticking points at any point in the travel you may need to adjust your post bracket pivot point to facilitate a smoother run.

INSTALL GATE STOPS
This is a critical point in ensuring long trouble free operation of your automation system, yet it is relatively simple. Each gate must have a positive and well secured opening stop and closing stop. There are a range of stops available over the counter or you can make them yourself but the critical point is that the stops must be well secured as the gear motors will exert quite a deal of force on them during programming. In summary when your gate/s open they must hit a positive stop point that stop the gate/s from opening any further and the same at the closed point.

ID200 Control board for 2 motors 12-24V

Important: Read this manual carefully before the installation. This manual is an integral part of your product, keep it for reference.

Warnings:

- First of all verify that this product is suitable for the installation.
- Read carefully technical characteristics before the installation.
- Installation of this control unit must be by qualified installers, following regulations of the installation country.
- It is mandatory to do periodic maintenance.
- Maintenance or repairs must be performed by qualified technicians.
- Turn the power off before maintenance or repairs.
- This device is intended for gate automation, any other applications is not advised.
- Manufacturer discharges all responsibility for missed respect of rules.
- Don't leave this control unit unattended or where children can reach

Preliminary checking:

- Verify that all the connected devices meet the technical characteristics listed in the table which follows.
- Verify that a working and suitable RCD is installed up line of the installation.
- Verify that cables composing the installation are suitable for it.

Conformity declaration:

The manufacturer:

Declares:

The control unit ID-200 is compliant to following directives:
- 2006/95/CE Low voltage directive.
- 2004/108/CE Electromagnetic compatibility.

Castiglione 30/07/2015

Technical characteristics	
Power Supply	12-20Vac/100-200VA
Max current out (14-15)	250mA
Embedded battery charger	12-24V, 100mA
Max. motor current	8A (200VA transformer)
Max. flashing light current	1A
Electric-Lock current	2A
Operating temperature range	-5 +60°C
Backup battery	(2x) 12V 4,5Ah

230Vac

Portafisibile
Fuseholder
Fusible

(1) Solo una tensione di batteria può essere collegata, o 12 o 24V.

Just a battery voltage can be connected, or 12 or 24V.

Trasformatore
Transformer
Transformeur
230/20Vac 100VA

24V (1)

12V (1)

TS1 TS2 TS3 TR1 TR2 DSP1 U4 CN2 CN4 F1 F2 F3 JP1 24 12 BATT FS1 FS2 FS3 FS4 AC IN MAX 24Vac +BATT BATT– CN1 CN5

ANT NO NO COM NC NC 8K2 8K2 COM STOP COM +12– M1 M2

1 2 3 4 5 6 7 8 9 10 11 12 13 14 15 16 17 18 19 20 21 22

Out 12Vdc 250mA

Electric Lock

Blinker

M1

M2

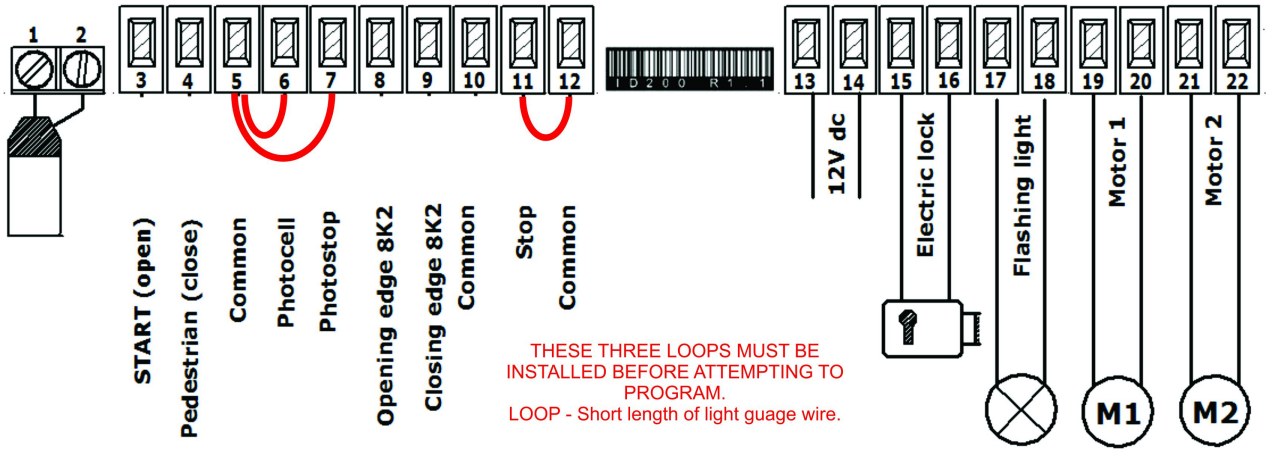

1	Antenna
2	Antenna's shield
3	Start input (NO) It completely opens the gate
4	Pedestrian start in. (NO) It opens just motor 2
5	Common
6	Photocell input (NC) During pause: Reloads pause During closing: Reverses motors direction
7	Photostop input (NC) During pause: Reloads pause During closing: Reverses motors direction During opening: stops the motors and waits till contact returns close.
8	Analog opening edge input (8K2 ohm) Waiting an opening command: inhibits opening During opening: reverses motor direction for 1 second. If not used leave unconnected.
9	Analog closing edge input (8K2 ohm) Waiting a closing command: inhibits closing During closing: reverses motor direction for 1 second If not used leave unconnected.
10	Common
11	Stop input (NC) It always stops motors and blocks control unit activity.
12	Common
13-14	Power supply output 12Vdc 250mA
15-16	Electric lock output
17-18	Flashing light output 12/24V 1A
19-20	Output motor 1 - 8A
21-22	Output motor 2 - 8A
TR1	Slowing down speed trimmer
TR2	Obstacle detection sensibility trimmer
TS1-TS3	Buttons up/down
TS2	Enter button
DSP	Display
FS3 – FS4	Transformer input 12-20Vac / 100-200VA
F2	Battery fuse 10A Fast
FS1 – FS2	Backup battery input 12/24Vdc
JP1	Backup battery voltage selector 12/24V

INPUT STATUS

When the control unit is waiting for an opening or closing cycle, or when it's in pause, status of inputs is displayed as following diagram.

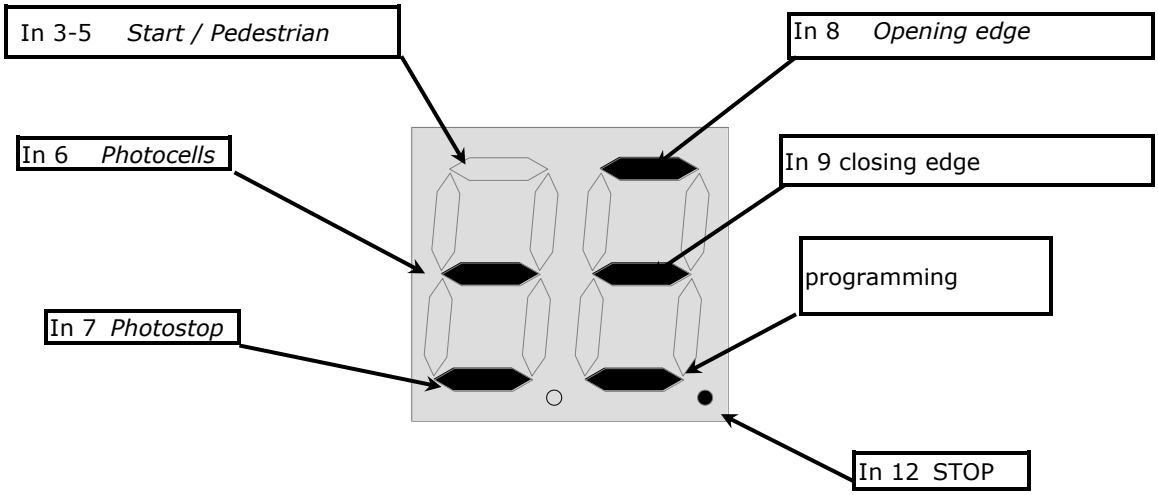

TRIMMER REGULATIONS

TR1 The slow down speed trimmer regulates the slow down speed. Do not set speed to low (less than 10cm/sec on the wing edge) to avoid that gate stops in too cold conditions.

TR2 The obstacle sensibility trimmer fine tunes the obstacle detection level learned by the control unit during working times programming. This fine regulation must be done after working times learning.
Normally the trimmer goes in the center, in this position it should be possible to respect the rules of most installations. If it is need to resolve problems related to norms or to environmental situations (ex. strong wind) is it possible to regulate this trimmer increasing or decreasing sensibility.

Less speedy	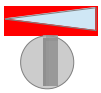	*More speedy*
TR1 *Slow down speed*		

Less pushing	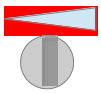	*More pushing*
TR2 *Obstacle sensibility*		

QUICK INSTALLATION - To program quickly the working times, ***open both wings ,*** then keep pushed up (TS!) until you read **AU** on the display. The control unit will perform several tests and then it will learn working times. When the procedure is finished the blinker goes off.

USE OF DOWN MENU AND UP BUTTONS FOR PROGRAMMING

Control unit function programming is made within a special configuration menu which you can access and program using the UP (TS1), ENTER (TS2) and DOWN (TS3) keys.
The configuration menu consists in a list of configurable items; the display shows the selected item.

- By pressing DOWN, you will pass to the next item
- By pressing UP, you will return to the previous item
- By pressing together UP and DOWN buttons you exit from the item
- By pressing ENTER, you can view the current value of selected item and possibly change it.

There are 2 main menus:

- *BASE PROGRAMMING* (BASE MENU): only the useful parameters for a base programming are displayed.
- *ADVANCED PROGRAMMING* (ADVANCED MENU): parameters of the advanced menu are displayed.

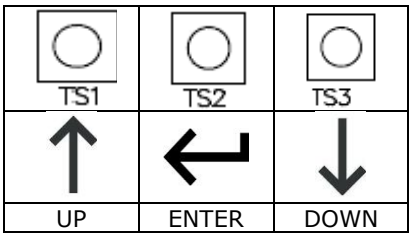

BASE MENU MAP

Press the ENTER key for 1 seconds for base menu.

8.8. ↵ **1 SEC.**	**oL**	*Operating logic*	↵ ⇅	**5T**	Step by step logic.
				At	Automatic closing with stop function.
				CD	Automatic closing for condominium function.
				EX	EXIT or push ⇅ together

⇅

LC	*Learns radio codes*	↵ ⇅	**C1**	*Learn a transmitter on channel 1*
			C2	*Learn a transmitter on channel 2*
			rt	Delete a code with transmitter*
			EX	EXIT or push ⇅ together

LC ***Learning / removing transmitters code***:
Select learning code function LC and push enter, than select one of following functions with up/down.
C1: learn a transmitter on channel 1
C2: learn a transmitter on channel 2
Rt: Delete all transmitters in memory.

Once the channel is selected press the desired button on the transmitter, on the display it will display "**OK**" if the operation was successful.

- To delete just one code, select **RT** and transmit the code to be removed, on the display it will display "**OK**" for a successful transmission.
- To delete all codes, select **RT** and push enter, then confirm with **YS**.

To exit this menu select **EX** or push up/down together.

LT	*Learn working times*	↵ ⇅	**AU**	Automatic learning procedure.
			MN	Manual learning procedure.
			EX	EXIT or push ⇅ together

LT learn working time:

⚠ Attention: before starting the learning procedure, the gate must be open to do an automatic procedure; otherwise it must be closed to do the manual procedure. Use manual override to put the gate in the correct position.

Select **LT** in the base menu and push enter, next select the learning mode with up/down.
AU: Automatic learning procedure.
MN: Manual learning procedure.
To exit this menu select **EX** or push up/down together.

AU *Automatic procedure for working time learning*:

⚠ Attention: in this procedure all safety inputs are disabled.
The wings close themselves, during this process all of the working times and values for obstacle detection sensors are learnt. If only motor 2 is connected, the control unit sets itself for "single wing working. If analogue edges are connected, they are automatically enabled.

MN *Manual procedure for working time learning:*

⚠ Attention: Before this procedure program at least one transmitter into memory. In this procedure all safety inputs are disabled.
Both wings start opening, during this phase you can adjust the slow down speed with the trimmer (TR1). Once both wings are open, press and release your programmed remote control. The control unit makes some tests of motor consumption to set the threshold for the obstacle detection sensor.
Once the test is finished, you will see **M1** on the display.
In the phase which follows, enter button or a memorized code control following sequence: start motor 1, start motor 2, slow down motor 1, slow down motor 2, stop motor 1, stop motor 2.
If just motor 2 is connected (single wing mode), program times just for this motor.

5P	Set pause time	↵	⇅ **0 – 99**

5P Set pause time: - Use up/down to set the pause time between **0** and **99** seconds. Pushes enter to confirm. To exit without modifications push together up and down.
Attention, setting a pause time doesn't enables automatic closing; please refer to chapter "**OL** operating logic" to enable this function.

DM	*Dead man mode*	↵ ⇅	**O1**	Open motor 1
			C1	Close motor 1
			O2	Open motor 2
			C2	Close motor 2
			EX	EXIT or push ⇅ together

DM Dead man mode:
Selecting this menu it is possible to control each motor in dead man mode. Push up and down to select one of following item:
O1 Open motor 1
C1 Close motor 1
O2 Open motor 2
C2 Close motor 2
EX Exit –
Press and hold the enter button to start the selected motor in dead man mode.

EX	Exit	↵

BOARD PROGRAMMING ADVANCED MENU
Push enter button till on the display is shown **TM**. With up/down it's possible to select all items in this menu.
To exit this menu select **EX** or push up/down together. After 2 minutes without actions, control unit exits itself from this menu.

ADVANCED MENU MAP

Press the ENTER key for 4 seconds for advanced menu.

4 SEC.	**TM**	*Working times menu*		**T1**	Working time motor 1	0 – 99
				51	Start time slowdown motor 1	
				T2	Working time motor 2	
				52	Start time slowdown motor 2	
				DO	Motors delay opening	
				DC	Motors delay closing	
				TC	Courtesy light time x10sec.	
				TL	Electric lock activation time	
				ex	EXIT or push together	

5G	*Single gate mode*		**YS**	Single wing YES
			NT	Single wing NOT
			ex	EXIT or push together

5G *Single wing mode: In this menu it's possible to verify or set if gate works in single wing mode (motor2)*

D2	*Loads factory defaults*		**YS**	sets the control unit at factory defaults.
			NT	Maintain settled parameters
			ex	EXIT or push together

RC	*Release end travel torque*		**YS**	Enable release end travel torque
			NT	Disable release end travel torque
			ex	EXIT or push together

RC *Release torque at work end:*
Enabling this function, the motors reverse direction for a while to release the torque at end of work.

Eo	*Analogue edge in opening*		**YS**	Enable
			NT	Disable
			ex	EXIT or push together

Eo Enabling this function it's enabled the edge active in opening period

Ec	*Analogue edge in closing*		**YS**	Enable
			NT	Disable
			EX	EXIT or push together

Ec *Enabling this function it's enabled the edge active in opening period*

Ar	*Transmitters auto learning*		**YS**	Enable
			NT	Disable
			EX	EXIT or push together

Ar Enable automatic transmitters leaning:
Enabling this function it's possible to insert new transmitters without accessing base menu. Refer to "Automatic transmitters learning".

LP	*Low power mode*	↵ ⇅	**YS**	Enable
			NT	Disable
			EX	EXIT or push ⇅ together

LP Enable low power mode:
In this menu you can enable the low power mode.

Attention: If enabled, the display is no longer showing input status (Display off in stand-by).

C5	*Kickback stroke*	↵ ⇅	**YS**	Enable
			NT	Disable
			EX	EXIT or push ⇅ together

C5 Enable kickback stroke:
In this menu you can enable the stroke at start to unlock electric lock and the final stroke to lock it.

EX	Exit	↵	

QUICK TABLE BASE MENU

Default settings
Here it follows list of default settings, the same set after a **D2** command of advanced menu

DISPLAY	***DESCRIPTION***	***DATA***	***DESCRIPTION***	***DEFAULT***	***DATA***
oL	*Operating logic*	**St**	*Step by step*	**St**	
		At	*Automatic closing with stop funcion.*		
		cd	Automatic *closing uninterruptible CONDOMINIUM*		
		EH	*EXIT*		
Lc	*Learning / removing transmitters code*	**c1**	*Learn a transmitter on channel 1*		
		c2	*Learn a transmitter on channel 2*		
		rt	*Erase codes*		
		EH	Uscita		
Lt	*Learn working time*	**Au**	*Automatic learning procedure*		
		Mn	*Manual learning procedure*		
		EH	*EXIT*		
SP	*Set pause time*	**0"-99**		**10** sec	
dM	*Dead man mode*	**o1**	*Open motor 1*		
		c1	*Close motor 1*		
		o2	*Open motor 2*		
		c2	*Close motor 2*		
		EH	*EXIT*		
EH	*EXIT*				

QUICK TABLE ADVANCED MENU

DISPLAY	DESCRIPTION	DATA	DESCRIPTION	DEFAULT	DATA
tM	*Working times menu*	t1	*Working time motor1*	30 sec	
		S1	*Start time slowdown motor1*	20 sec	
		t2	*Working time motor2*	30 sec	
		S2	*Start time slowdown motor2*	20 sec	
		do	*Motors delay opening*	02 sec	
		dc	*Motors delay closing*	05 sec	
		tL	*Electric lock activation time*	02 sec	
		EH	*EXIT*		
SG	*Single wing mode*	yS	*Yes*	nt	
		nt	*No*		
		EH	*Exit*		
d2	*Default settings*	yS	*Yes*		
		nt	*No*		
		EH	*EXIT*		
rc	*Release torque at work end*	yS	*Yes*	nt	
		nt	*No*		
		EH	*EXIT*		
Eo	*Analogue edge in opening*	yS	*Yes*	nt	
		nt	*No*		
		EH	*EXIT*		
Ec	*Analogue edge in closing*	yS	*Yes*	nt	
		nt	*No*		
		EH	*EXIT*		
Ar	*Transmitters auto learning*	yS	*Yes*	ys	
		nt	*No*		
		EH	*EXIT*		
LP	*Low power mode*	yS	*Yes*	nt	
		nt	*No*		
		EH	*EXIT*		
C5	*Kickback stroke*	yS	*Yes*	nt	
		nt	*No*		
		EH	*EXIT*		
EH	*EXIT*				

	5T STEP BY STEP MODE						
PHASE	**COMMAND**						
	START	PEDESTRIAN	PHOTOCELL	FOTOSTOP	EDGE OPENING	EDGE CLOSING	STOP
CLOSED	Opens	Opens	Ignored	Stops	Stops	Ignored	Stop
OPENING	Stops	Stops	Ignored	Stops and wait release	Reverses 1sec.	Ignored	
OPEN	Closes	Closes	Ignored	Stops	Ignored	Stops	
CLOSING	Stops	Stops	Reverses	Reverses	Ignored	Reverses 1sec.	
STOP	Ignored	Ignored	Ignored	Ignored	Ignored	Ignored	-

	AT AUTOMATIC CLOSING MODE						
PHASE	**COMMAND**						
	START	PEDESTRIAN	PHOTOCELL	FOTOSTOP	EDGE OPENING	EDGE CLOSING	STOP
CLOSED	Opens	Opens	Ignored	Stops	Stops	Ignored	Stop
OPENING	Stops	Stops	Ignored	Stops and waits release	Reverses 1sec.	Ignored	
OPEN	Closes	Closes	Ignored	Stops	Ignored	Stops	
DURING PAUSE	Exits pause	Exits pause	Reloads time	Reloads time	Ignored	Reloads time	
CLOSING	Stops	Stops	Reverses	Reverses	Ignored	Reverses	
STOP	Ignored	Ignored	Ignored	Ignored	Ignored	Ignored	-

	cd CONDOMINIUM MODE						
PHASE	**COMMAND**						
	START	PEDESTRIAN	PHOTOCELL	FOTOSTOP	EDGE OPENING	EDGE CLOSING	STOP
CLOSED	Opens	Opens	Ignored	Stops	Stops	Ignored	Stop
OPENING	Ignored	Ignored	Ignored	Stops and wait release	Reverses 1sec.	Ignored	
OPEN	Ignored	Ignored	Ignored	Stops	Ignored	Stops	
DURING PAUSE	Reloads time	Reloads time	Reloads time	Reloads time	Ignored	Reloads time	
CLOSING	Ignored	Ignored	Reverses	Reverses	Ignored	Reverses 1sec.	
STOP	Ignored	Ignored	Ignored	Ignored	Ignored	Ignored	-

Diagnostic and troubleshooting
The control unit has self-diagnostic software able to find problems. Once a problem occurs, a code is shown on the display in alternate with command status.
Here it follows a troubleshooting table.

Error code	***Problem and eventual solution***
E1	Mains power fail, system is running with backup battery. *Verify mains switch and RCD switch. Verify fuse on transformer (fuse holder)*
E2	Obstacle detected in the previous cycle. *Verify that gate is free and there are no obstacles in the range.* *Verify gate wings are not blocked.*
E3	Photocells or photostop obstructed for longer than 2 minutes. The gate can't start moving and the blinker could be fixed on. *Verify that photocells and photostop are not obstructed.*
E4	One of the analog edges is engaged for longer than 2 minutes. *Verify edges aren't engaged. If no edge installed, disable them in the advanced menu*
E5	Stop is engaged for longer than 2 minutes. *Verify wiring to emergency device. If there isn't an emergency device installed, shunt this input with the common.*
E6	Problem on motor 1. *Verify connections to the motor, verify motor can work in manual mode*
E7	Problem on motor 2. *Verify connections to the motor; verify motor can work in manual mode.*

AUTOMATIC
SOLUTIONS